NAVILITE 12V SOLAR [P/N: 113903]

Led low intensity type A



- Light part completely molded with 4 levels of leds
- Redundant circuits for LED's : 16 circuits of 4 LEDs in redundancy
- No rise from the ground potential (due to lightning for example)
- Bird spike

The stainless bracket NAVILITE-HOLDER for mounting shall be order separately

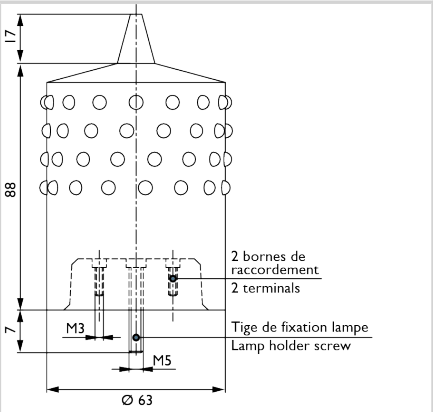

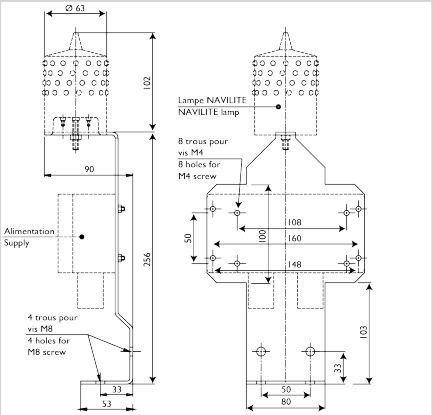

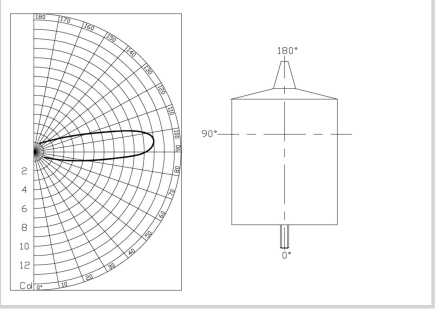

Electrical Characteristics	
Wattage	3W
Current drawn	250 mA
Life time	~10years
Main voltage	12VDC (-10%; +15%)
Mechanical Characteristics	
IP degree	IP66
Wiring	Terminal connection by 2 pods
Operating temperature	-40/+55°C
Weight	0.38 kg
Weight	0.38 kg
Size of the light	112mm (height) x 63mm (over diameter)
Attachment	1 screw M5 provided
Photometric Characteristics	
Luminous intensity	> 10 Cd
Color night time	Red fixed
Vertical beam spread	>10°
Horizontal beam spread	360°
Standards	
Standards compliance	ICAO annexe 14 chapter 6 (8th edition 07/2018), EASA (4th edition 2017)