OFD-RW-048

[P/N: 114792-048]

MEDIUM INTENSITY

Dual color medium intensity NVG compatible (infrared night vision goggles)
Comply with ICAO medium intensity dual color type A and B



Dual color flashhead

- Hard glass protection
- Robust construction in aluminium
- Precise optic, low power consumption
- Hexagon shape with 6 modules each including white, red and infrared led circuits
- NVG visible as per FAA standard
- Simple installation with no losing parts
- Normally open or normally close relay available in case of lamp or power supply default
- Smart beacon with communication capabilities (controller, TCP Modbus)
- type 2 surge protection with indicator
- Photocensor and GPS built-inside
- Low weight and compact design
- Breather vent

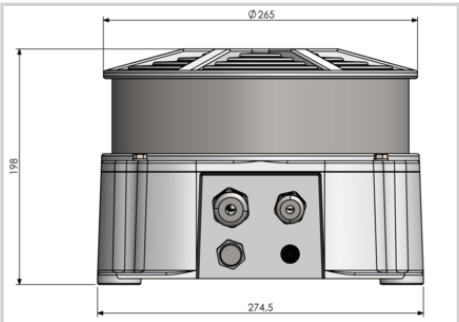

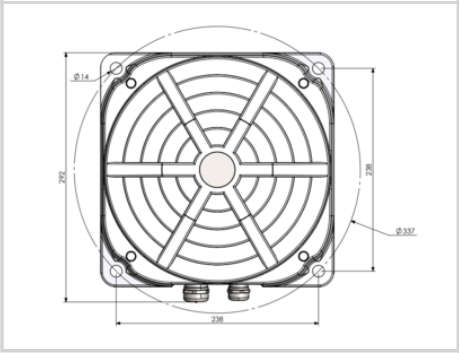

Electrical Characteristics	
Main voltage	48VDC (-10%; +15%)
Average wattage	30W (Day Mode) 5W (Night Mode Red+IR)
Mechanical Characteristics	
IP degree	IP66
Wiring	Entry of cable by glands nickel plated brass and connection by spring terminals
Operating temperature	-40/+55°C
Size of the light	270 x 270 x 200 mm
Weight	10 kg
Cable entry diameter	1x M25 - 9 to 16 mm 1x M20 - 7 to 13 mm
Wire cross section	Power: 0.2 - 6mm² (24 - 8 AWG) Signal : 0.2 - 2.5 mm² (24 - 14 AWG)
Attachment	4x #14mm on #238mm (FAA standard)
Photometric Characteristics	
IR intensity and wavelength	> 600mW/sr @ 800-900nm
Effective light output day time at 0° on site	20 000cd (white)
Effective light output twilight mode at 0° on site	20 000cd (white)
Effective light output night mode at 0° on site	2000cd (red) with IR
Color day/twilight time	white
Color night time	Red
Vertical beam spread	>3°
Horizontal beam spread	360°
Flash per minute	Type A: 20 / 30 / 40 / 60 FPM Type B: 20 / 30 / 40 / 60 FPM Type C : Continuous
Standards	
Standards compliance	ICAO annex 14 chapter 6 (8th edition 07/2018), EASA (4th edition 2017), infrared as per intensity defined by FAA EB-98-NVG