Type 2 AC surge protector - 3-phase

DAC50S-30-150



- Type 2 AC surge protector
- In: 20 kA
- Imax: 50 kA
- Pluggable module for each phase
- Remote signaling
- EN 61643-11, IEC 61643-11 compliance

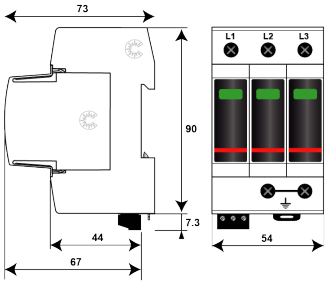

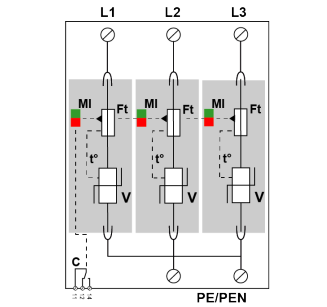

V: High-energy varistor
Ft: Thermal fuse
C: Remote signal contact
t°: Thermal disconnection system
MI: Disconnection indicator

Electrical Characteristics		
SPD type	IEC	2
Network		120/208 V
AC system		TNC
Max. AC operating voltage	Uc	150 Vac
Temporary Over Voltage (TOV) Characteristics - 5 sec. *Without disconnection*	UT	180 Vac withstand
Temporary Over Voltage (TOV) Characteristics - 120 mn *Without disconnection or with safety disconnection*	UT	230 Vac disconnection
Residual Current *Leakage current to Ground*	Ipe	< 1 mA
Follow current	If	None
Nominal discharge current *15 x 8/20 µs impulses*	In	20 kA
Max. discharge current *max. withstand @ 8/20 µs by pole*	Imax	50 kA
Total Maximum discharge current *max. total withstand @ 8/20 µs*	Imax Total	150 kA
Protection mode(s)		L/PE
Protection level L/PE *@ In (8/20µs)*	Up L/PE	0.9 kV
Admissible short-circuit current	Isccr	50 000 A
Mechanical Characteristics		
Technology		MOV
SPD configuration		3-phase
Connection to Network		By screw terminals: 2.5-25mm²
Format		Plug-in modular box
Mounting		Symmetrical rail 35 mm (EN 60715)
Housing material		Thermoplastic UL94 V-0
Operating temperature	Tu	-40/+85°C
Protection rating		IP20
Failsafe mode		Disconnection from AC network
Disconnection indicator		1 mechanical indicator by pole - Red/Green
Spare module(s)		MDAC50-150
Remote signaling of disconnection		output on changeover contact
Wiring for remote signaling		1.5 mm² max.
Max. Voltage/Current for remote signaling		250 V / 0.5 A (AC) / 30 V / 3 A (DC)
Dimensions		See diagram - 3 TE (EN43880)
Weight		0.272 kg
Disconnectors		
Thermal disconnector		Internal
Installation ground fault breaker		Type 'S' or delayed
Back-up protection device		50 A min. - 125 A max. - Fuses Type gG
Standards		
Standards compliance		IEC 61643-11 / EN 61643-11
Certification		OVE / UL
Part number		
821110123		